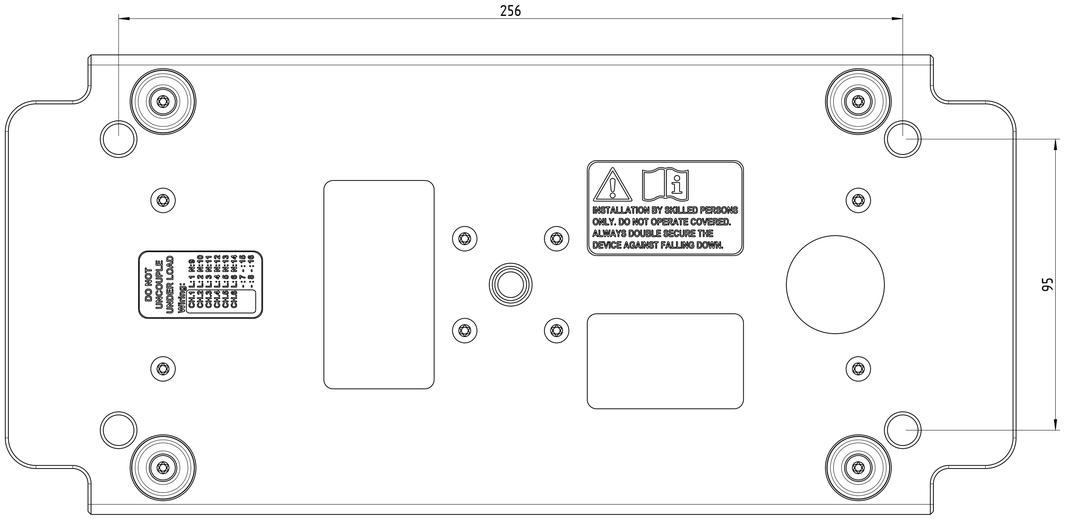

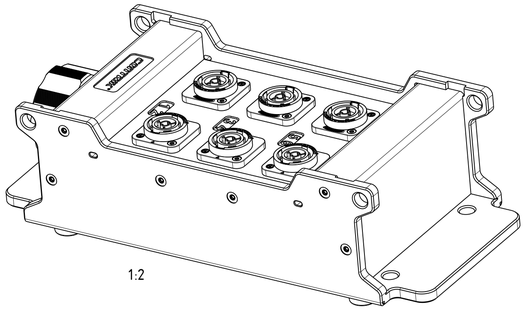

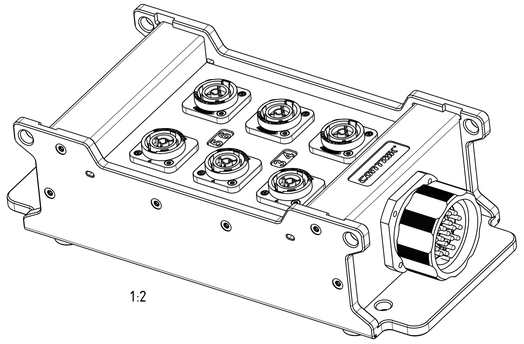

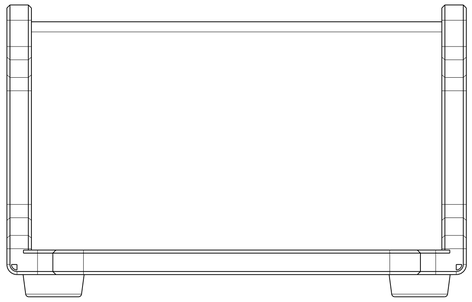

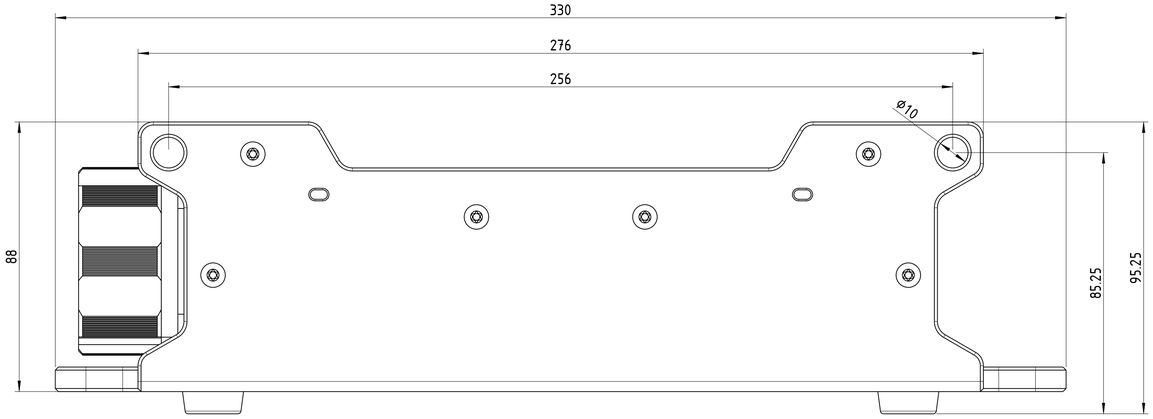

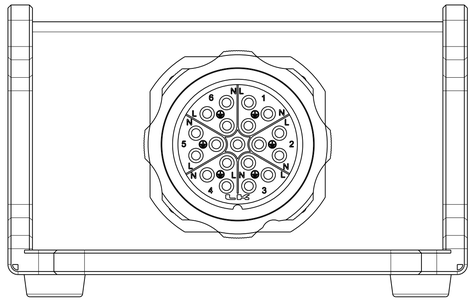

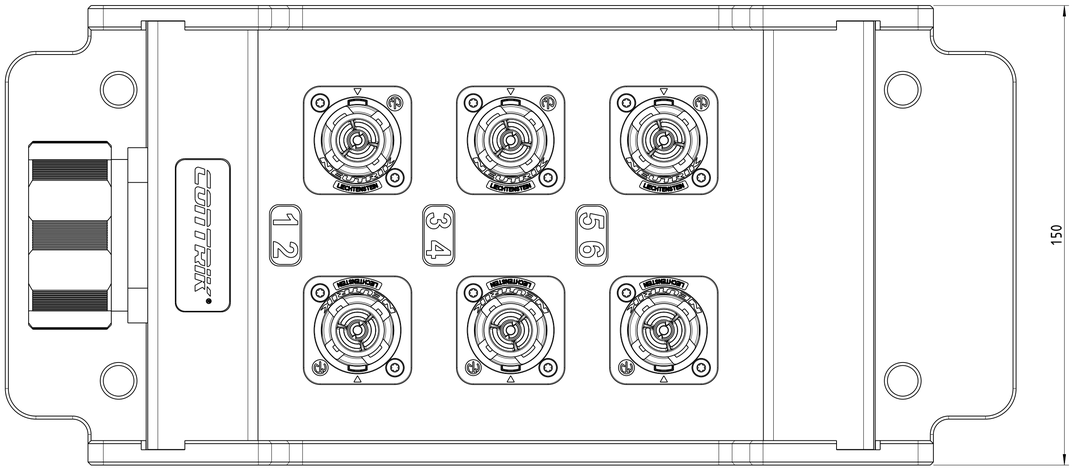

Sheet Number	Projection	Scale	Format	General Tolerancing	
1/1		1:1	A1	ISO 2768 mK	
Description			Created on/by	19.12.2023	Schmiedl T.
CPSMX-S1-T6			Approved on/by	21.12.2023	Feurle E.
			Article ID	Model ID	Drawing ID
			1037505	30011203	20005602
Status			Revision	ECN Number	Neutrik Group
Released			-	-	

Copyright © Neutrik AG / im alten Riet 143 / 9494 Schaan / Liechtenstein